FOR RING DETAILS SEE: RC8041-RS

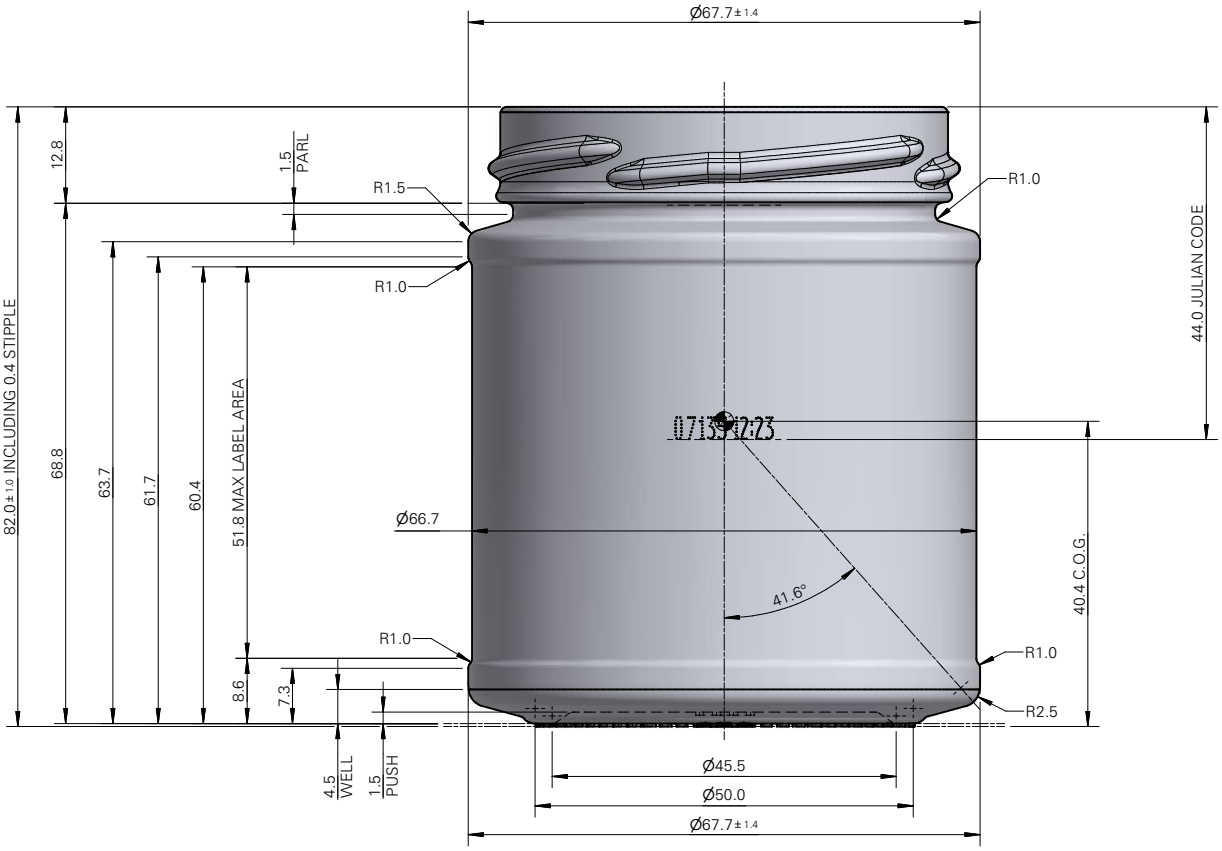

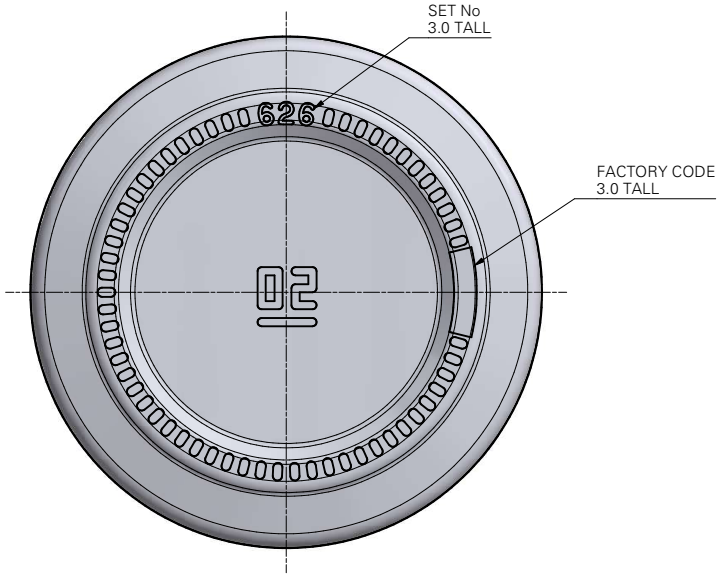

BASE EMBOSSING TO BE
3.0 TALL INCLUDING:

SET NUMBER
FACTORY CODE

LNMC GRID (3.0)

(57) BAR STIPPLES
TO AGC STD: 5325-H

DESCRIPTION: 199ml JAR NP	CAPACITY AT FILL POINT ml	APPROX. GLASS WEIGHT 168 g	GLASS CONTAINER SPECIFICATION THIS DRAWING IS THE PROPERTY OF VERALLIA UK. REPRODUCTION AND DISTRIBUTION PROHIBITED WITHOUT OUR PRIOR WRITTEN PERMISSION. NON-TOLERANCED DIMENSIONS ARE CONSTRUCTION DIMENSIONS GIVEN FOR INFORMATION ONLY.		
PRODUCT: FOOD	CAPACITY TOLERANCE +/- 3.8 ml	GLASS COLOUR STD FLINT			
PE No. / PROPOSAL No. 1	VACUITY (excl. FITMENT or CORK) % ml	FINISH DESCRIPTION 63mm CMB POOLE + M.B.			
CUSTOMER: GENERAL TRADE	FILL BELOW TOP mm	FINISH SPECIFICATION RC8041-RS			
DATE 28.06.2002 / DRAWN R.W. / CHECKED A.H. / SHEET 1 OF 1 / SIZE A2	MEASURING CONTAINER ± ml	RING NECK DIAMETER 55.8mm			
3D MODEL REF. G626-8041-199ml-JAR-NP.ipt	BRIMFUL CAPACITY 199 ml	MOULD No. G626			
COLOUR COATING NONE / VERTICAL LOAD 2000 N	THERMAL SHOCK STD °C / REFILLABLE NO	MAX. INT. PRESSURE NIL BAR @20°c	PASTEURISED YES		

REV.	DETAILS	DRN	CKD	DATE
J				
I				
H				
G				
F	JULIAN CODE AT 13MM DOWN FOR BEATSON CLARK REMOVED AT QC REQUEST	GCR		08.09.25
E	REDRAWN ON VERALLIA BORDER	R.N.	G.C.R	24.07.2023
D	BEATSON CLARK JULIAN CODE ADDED	G.C.R		15.04.2020
C	BEATSON JULIAN CODE NOTE REMOVED	G.N.		15.03.2019
B	UV CODE CHANGED TO LASER CODE	G.C.R		02.08.2017
A	PROD APPROVED ADDITION OF MINI BEAD	A.H.		17.07.2013

SPECIFICATION No. G626-8041